Cambridge Assessment International Education

Cambridge International AS & A Level

CANDIDATE NAME

CENTRE NUMBER

CANDIDATE NUMBER

4079990532

PHYSICS **9702/42**

Paper 4 A Level Structured Questions **October/November 2021**

2 hours

You must answer on the question paper.

No additional materials are needed.

INSTRUCTIONS

- Answer **all** questions.
- Use a black or dark blue pen. You may use an HB pencil for any diagrams or graphs.
- Write your name, centre number and candidate number in the boxes at the top of the page.
- Write your answer to each question in the space provided.
- Do **not** use an erasable pen or correction fluid.
- Do **not** write on any bar codes.
- You may use a calculator.
- You should show all your working and use appropriate units.

INFORMATION

- The total mark for this paper is 100.
- The number of marks for each question or part question is shown in brackets [ ].

This document has **24** pages. Any blank pages are indicated.

© UCLES 2021

Data

speed of light in free space	$c = 3.00 \times 10^{8}\,\text{m s}^{-1}$
permeability of free space	$\mu_0 = 4\pi \times 10^{-7}\,\text{H m}^{-1}$
permittivity of free space	$\varepsilon_0 = 8.85 \times 10^{-12}\,\text{F m}^{-1}$
	$(\frac{1}{4\pi\varepsilon_0} = 8.99 \times 10^{9}\,\text{m F}^{-1})$
elementary charge	$e = 1.60 \times 10^{-19}\,\text{C}$
the Planck constant	$h = 6.63 \times 10^{-34}\,\text{J s}$
unified atomic mass unit	$1\,\text{u} = 1.66 \times 10^{-27}\,\text{kg}$
rest mass of electron	$m_e = 9.11 \times 10^{-31}\,\text{kg}$
rest mass of proton	$m_p = 1.67 \times 10^{-27}\,\text{kg}$
molar gas constant	$R = 8.31\,\text{J K}^{-1}\,\text{mol}^{-1}$
the Avogadro constant	$N_A = 6.02 \times 10^{23}\,\text{mol}^{-1}$
the Boltzmann constant	$k = 1.38 \times 10^{-23}\,\text{J K}^{-1}$
gravitational constant	$G = 6.67 \times 10^{-11}\,\text{N m}^2\,\text{kg}^{-2}$
acceleration of free fall	$g = 9.81\,\text{m s}^{-2}$

© UCLES 2021

Formulae

uniformly accelerated motion	$s = ut + \frac{1}{2}at^2$ $v^2 = u^2 + 2as$
work done on/by a gas	$W = p\Delta V$
gravitational potential	$\phi = -\frac{Gm}{r}$
hydrostatic pressure	$p = \rho gh$
pressure of an ideal gas	$p = \frac{1}{3}\frac{Nm}{V}\langle c^2 \rangle$
simple harmonic motion	$a = -\omega^2 x$
velocity of particle in s.h.m.	$v = v_0 \cos \omega t$ $v = \pm \omega \sqrt{(x_0^2 - x^2)}$
Doppler effect	$f_o = \frac{f_s v}{v \pm v_s}$
electric potential	$V = \frac{Q}{4\pi\varepsilon_0 r}$
capacitors in series	$1/C = 1/C_1 + 1/C_2 + \ldots$
capacitors in parallel	$C = C_1 + C_2 + \ldots$
energy of charged capacitor	$W = \frac{1}{2}QV$
electric current	$I = Anvq$
resistors in series	$R = R_1 + R_2 + \ldots$
resistors in parallel	$1/R = 1/R_1 + 1/R_2 + \ldots$
Hall voltage	$V_H = \frac{BI}{ntq}$
alternating current/voltage	$x = x_0 \sin \omega t$
radioactive decay	$x = x_0 \exp(-\lambda t)$
decay constant	$\lambda = \frac{0.693}{t_{\frac{1}{2}}}$

© UCLES 2021

Answer **all** the questions in the spaces provided.

1 **(a)** State what is meant by *centripetal* acceleration.

.....

.....

..... [1]

(b) An unpowered toy car moves freely along a smooth track that is initially horizontal. The track contains a vertical circular loop around which the car travels, as shown in Fig. 1.1.

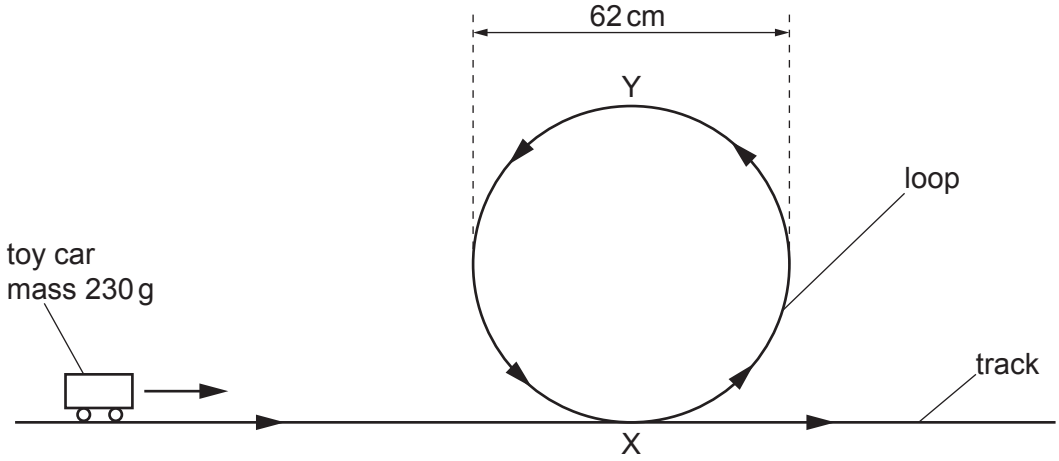

Fig. 1.1

The mass of the car is 230 g and the diameter of the loop is 62 cm. Assume that the resistive forces acting on the car are negligible.

(i) State what happens to the magnitude of the centripetal acceleration of the car as it moves around the loop from X to Y.

..... [1]

(ii) Explain, if the car remains in contact with the track, why the centripetal acceleration of the car at point Y must be greater than $9.8\,m\,s^{-2}$.

.....

.....

..... [2]

(c) The initial speed at which the car in **(b)** moves along the track is $3.8\,m\,s^{-1}$.

Determine whether the car is in contact with the track at point Y. Show your working.

[3]

(d) Suggest, with a reason but without calculation, whether your conclusion in **(c)** would be different for a car of mass 460 g moving with the same initial speed.

.....

.....

..... [1]

[Total: 8]

2 **(a)** State the relationship between gravitational potential and gravitational field strength.

.....

.....

..... [2]

(b) A moon of mass M and radius R orbits a planet of mass $3M$ and radius $2R$. At a particular time, the distance between their centres is D, as shown in Fig. 2.1.

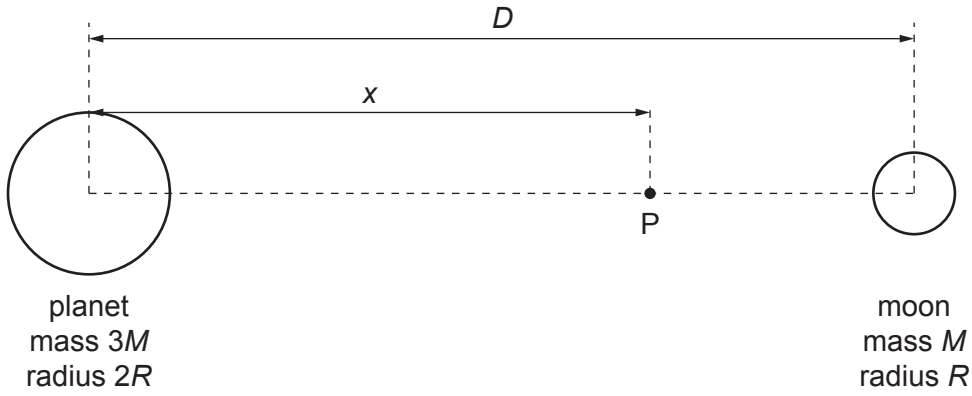

Fig. 2.1

Point P is a point along the line between the centres of the planet and the moon, at a variable distance x from the centre of the planet.

The variation with x of the gravitational potential ϕ at point P, for points between the planet and the moon, is shown in Fig. 2.2.

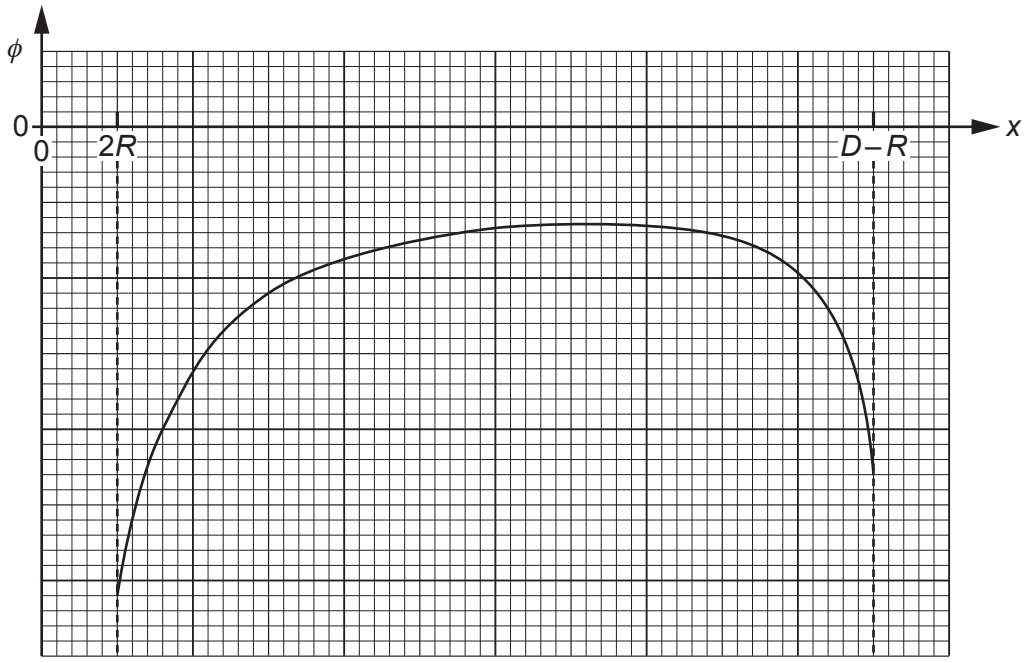

Fig. 2.2

© UCLES 2021

(i) Explain why ϕ is negative throughout the entire range $x = 2R$ to $x = D - R$.

.....

.....

.....

..... [3]

(ii) One of the features of Fig. 2.2 is that ϕ is negative throughout.

Describe **two** other features of Fig. 2.2.

1. .....

.....

2. .....

.....

[2]

(iii) On Fig. 2.3, sketch the variation with x of the gravitational field strength g at point P between $x = 2R$ and $x = D - R$.

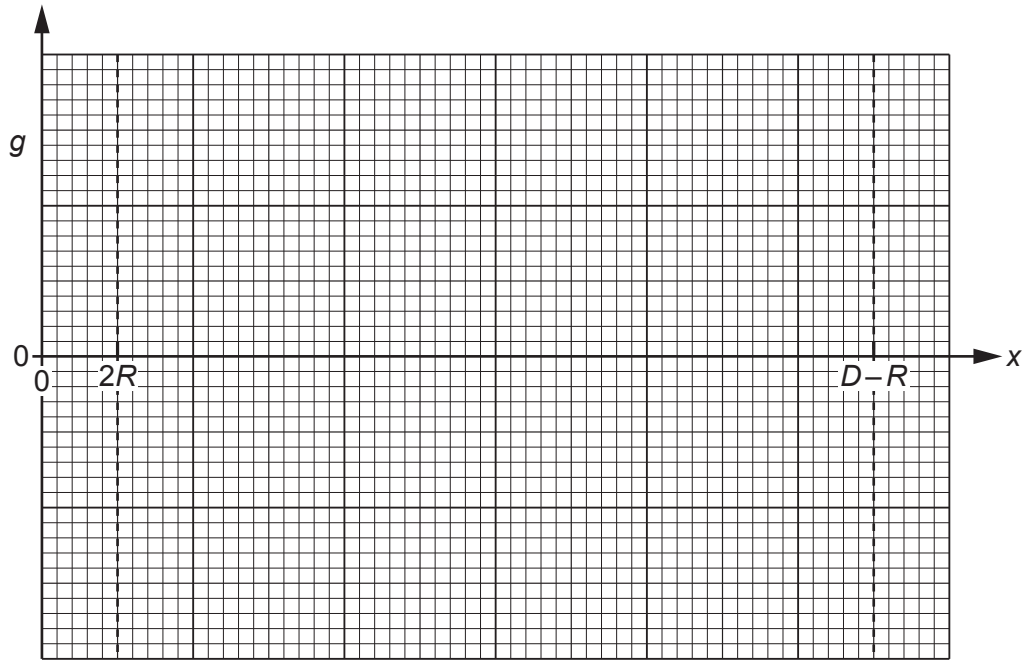

Fig. 2.3

[3]

[Total: 10]

3 **(a)** One of the assumptions of the kinetic theory of gases is that all collisions involving molecules of the gas are elastic.

(i) State what is meant by an *elastic* collision.

.....

..... [1]

(ii) State **two** other assumptions of the kinetic theory of gases.

1. .....

.....

2. .....

.....

[2]

(b) A molecule of an ideal gas has mass m and is contained in a cubic box of side length L. The molecule is moving with velocity u towards the face of the box that is shaded in Fig. 3.1.

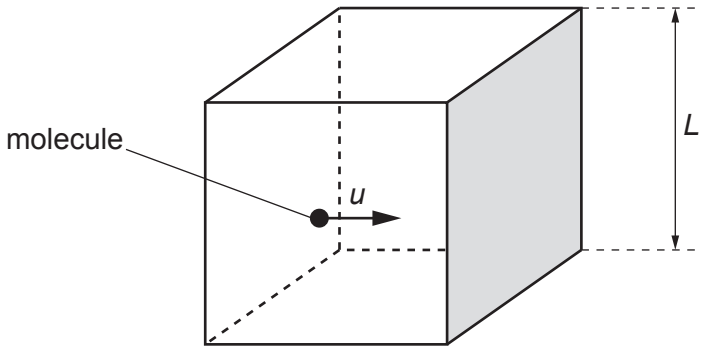

Fig. 3.1

The molecule collides elastically with the shaded face and the face opposite to it alternately.

Deduce expressions, in terms of m, u and L, for:

(i) the magnitude of the change in momentum of the molecule on colliding with a face

change in momentum = ... [1]

(ii) the time between consecutive collisions of the molecule with the shaded face

time = ... [1]

© UCLES 2021

(iii) the average force exerted by the molecule on the shaded face

force = ... [1]

(iv) the pressure on the shaded face if the force in **(iii)** is exerted over the whole area of the face.

pressure = ... [1]

(c) When the model described in **(b)** is extended to three dimensions, and to a gas containing N molecules, each of mass m, travelling with mean-square speed $\langle c^2 \rangle$, it can be shown that

$$pV = \frac{1}{3}Nm\langle c^2 \rangle$$

where p is the pressure exerted by the gas and V is the volume of the gas.

Use this expression, together with the equation of state of an ideal gas, to show that the average translational kinetic energy E_K of a molecule of an ideal gas is given by

$$E_K = \frac{3}{2}kT$$

where T is the thermodynamic temperature of the gas and k is the Boltzmann constant.

[2]

(d) The mass of a hydrogen molecule is 3.34×10^{-27} kg.

Use the expression for E_K in **(c)** to determine the root-mean-square (r.m.s.) speed of a molecule of hydrogen gas at 25 °C.

r.m.s. speed = ... $m\,s^{-1}$ [2]

[Total: 11]

4 A trolley on a smooth surface is attached by springs to fixed blocks as shown in Fig. 4.1.

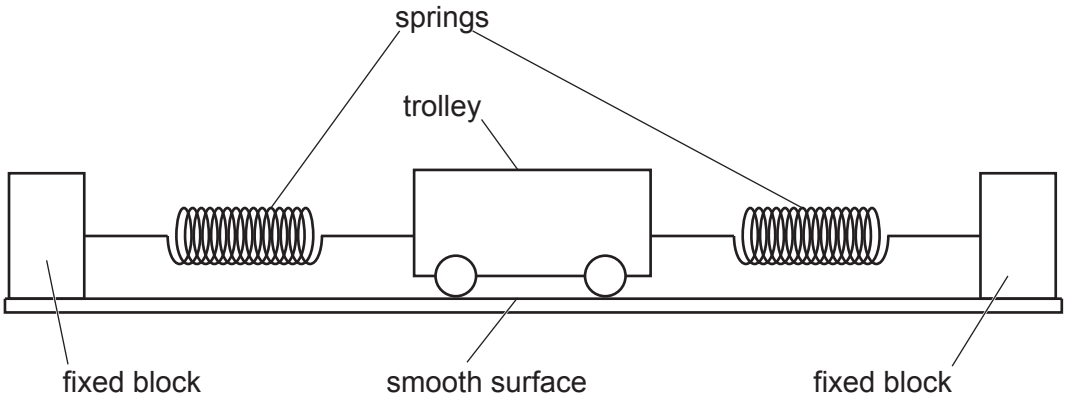

Fig. 4.1

The trolley oscillates horizontally about its equilibrium position with an amplitude of 12 cm. Fig. 4.2 shows the variation of the acceleration a of the trolley with displacement x from its equilibrium position. Friction between the trolley and the surface can be assumed to be negligible.

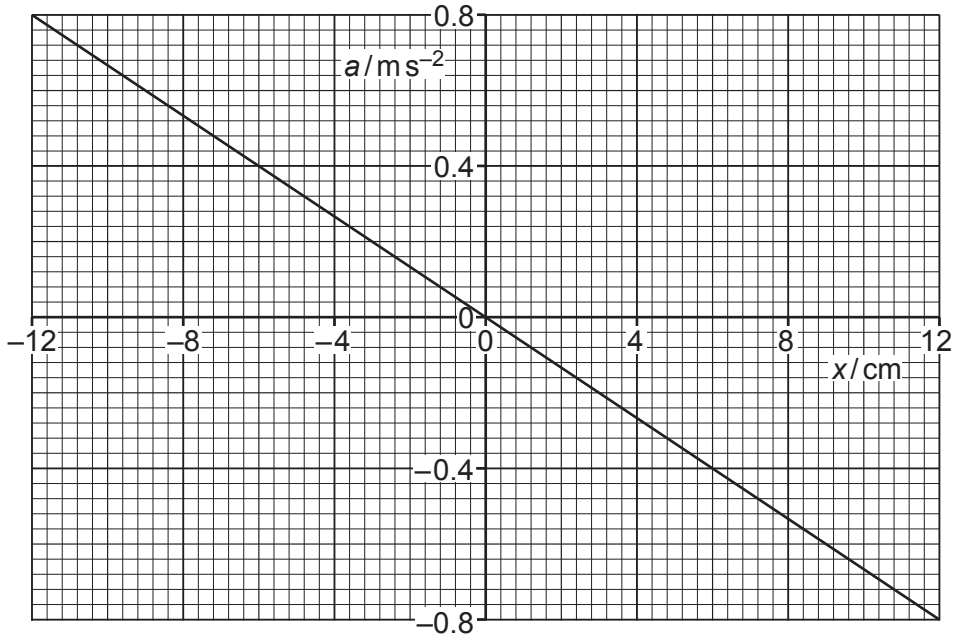

Fig. 4.2

(a) Describe the features of the line in Fig. 4.2 that demonstrate that the motion of the trolley is simple harmonic.

.....

.....

..... [2]

(b) Use Fig. 4.2 to determine the period T of the oscillations of the trolley.

T = ... s [3]

(c) **(i)** On the line of the graph of Fig. 4.2, label with the letter P one point where the kinetic energy of the trolley is zero. [1]

(ii) On the line of the graph of Fig. 4.2, label with the letter Q an approximate position of one point where the kinetic energy of the trolley is equal to the potential energy stored in the springs. [1]

[Total: 7]

5 **(a)** **(i)** When audio signals are transmitted over long distances, modulation of radio waves is used.

Suggest a reason why modulation is used.

.....

..... [1]

(ii) State a technical advantage and a technical disadvantage of using frequency modulation rather than amplitude modulation.

advantage: .....

.....

disadvantage: .....

.....

[2]

(b) An audio signal of amplitude 2.0 μV and frequency 4.2 kHz is to be transmitted using a carrier wave of amplitude 10.0 mV and frequency 100 kHz.

Either amplitude modulation or frequency modulation may be used.

The amplitude modulation is at a rate of $1\,\text{mV}\,\mu\text{V}^{-1}$.
The frequency modulation is at a rate of $5\,\text{kHz}\,\mu\text{V}^{-1}$.

Complete Table 5.1 to show the maximum and minimum values of the amplitude and of the frequency of the modulated wave for each type of modulation.

Table 5.1

	amplitude / mV		frequency / kHz	
	minimum	maximum	minimum	maximum
amplitude modulation				
frequency modulation				

[4]

(c) For the amplitude modulated wave in **(b)**, determine the bandwidth.

bandwidth = ... kHz [1]

[Total: 8]

© UCLES 2021

6 **(a)** Define *electric potential*.

.....

.....

..... [2]

(b) An isolated conducting sphere in a vacuum has radius r and is initially uncharged. It is then charged by friction so that it carries a final charge Q. This charge can be considered to be acting at the centre of the sphere.

By considering the electric potential at its surface, show that the capacitance C of the sphere is given by

$$C = 4\pi\varepsilon_0 r$$

where ε_0 is the permittivity of free space.

[2]

(c) The dome of an electrostatic generator is a spherical conductor of radius 13 cm. It is initially charged so that the electric potential at the surface is 4.5 kV.

A smaller isolated sphere of radius 5.2 cm, initially uncharged, is brought near to the dome. Sparking causes a current between the two spheres until they reach the same potential. Assume that any charge on a sphere may be considered to act as a point charge at its centre.

Calculate the charge that is transferred between the two spheres.

charge = ... C [3]

[Total: 7]

7 **(a)** An operational amplifier (op-amp) has two input terminals and one output terminal.

State what is meant by the *gain* of an op-amp.

.....

.....

..... [2]

(b) State **two** effects of negative feedback on the gain of an amplifier circuit that uses an op-amp.

1. .....

.....

2. .....

.....
[2]

(c) Fig. 7.1 shows an op-amp circuit that uses negative feedback.

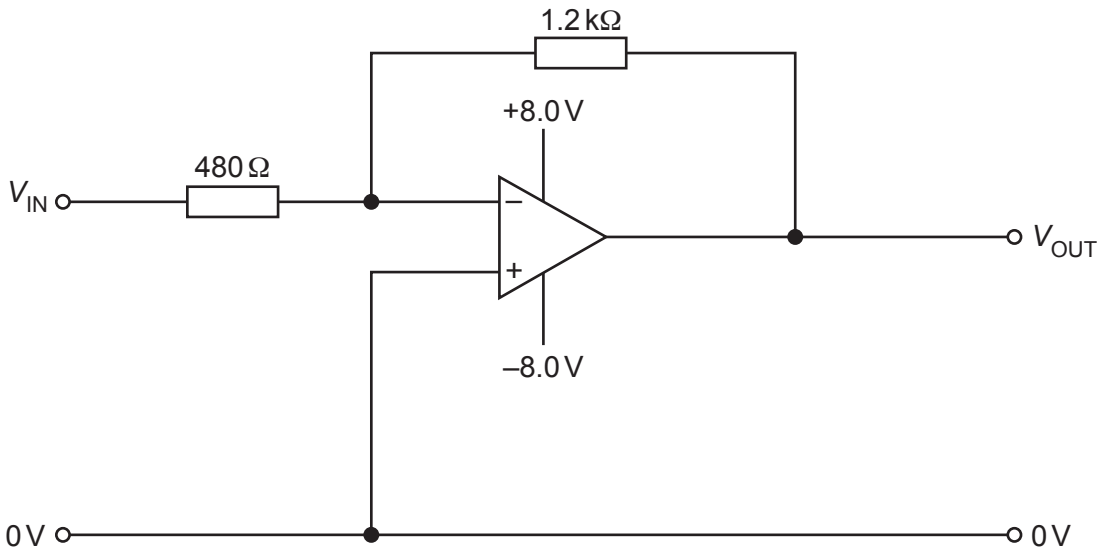

Fig. 7.1

(i) State the name of the type of circuit shown in Fig. 7.1.

..... [1]

(ii) On Fig. 7.1, label with the letter X a point in the circuit that is considered to be a virtual earth. [1]

(iii) Calculate the gain of the circuit in Fig. 7.1.

gain = ... [2]

(iv) Determine the value of V_{IN} when V_{OUT} is +6.5 V.

V_{IN} = ...V [1]

(v) Determine the value of V_{OUT} when V_{IN} is –5.4 V.

V_{OUT} = ...V [1]

[Total: 10]

8 Two long straight parallel wires P and Q carry currents into the plane of the paper, as shown in Fig. 8.1.



Fig. 8.1

The current in P is I and the current in Q is $2I$.

(a) (i) On Fig. 8.1, draw an arrow to show the direction of the magnetic field at wire Q due to the current in wire P. Label this arrow B. [1]

(ii) On Fig. 8.1, draw another arrow to show the direction of the force acting on wire Q due to the current in wire P. Label this arrow F. [1]

(b) (i) State, with a reason, how the magnitude of the force acting on wire P compares with the magnitude of the force acting on wire Q.

.....

.....

.....

..... [2]

(ii) State how the direction of the force on wire P compares with the direction of the force on wire Q.

.....

..... [1]

[Total: 5]

© UCLES 2021

9 **(a)** State what is meant by:

(i) the *photoelectric effect*

.....

.....

..... [2]

(ii) *work function energy*.

.....

..... [1]

(b) A polished calcium plate in a vacuum is investigated by illuminating the surface with light.

It is found that no photoelectric current is produced when the frequency of the light is less than 6.93×10^{14} Hz.

(i) State the name of the frequency below which no photoelectric current is produced.

..... [1]

(ii) Explain how the photon model of electromagnetic radiation accounts for this phenomenon.

.....

.....

.....

..... [3]

(iii) Calculate the work function energy, in eV, of calcium.

work function energy = ... eV [2]

[Total: 9]

10 Fig. 10.1 shows a simple laminated iron-cored transformer consisting of a primary coil of 25 000 turns and a secondary coil of 625 turns.

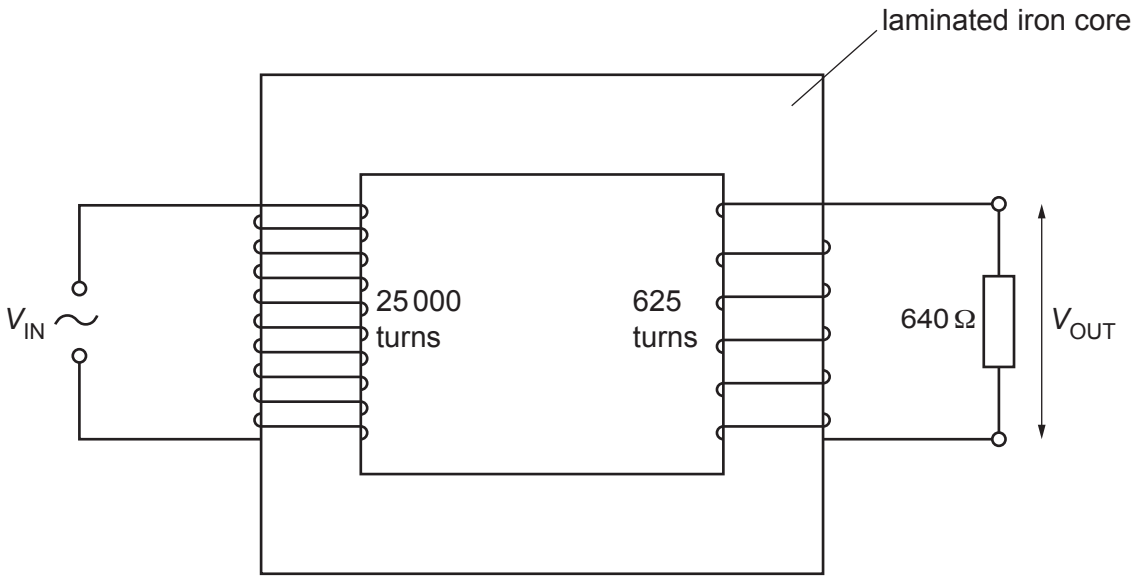

Fig. 10.1

The output potential difference (p.d.) V_{OUT} is applied to a load resistor of resistance 640 Ω.

(a) (i) State the function of the iron core.

.....

..... [1]

(ii) Explain why the iron core is laminated.

.....

.....

..... [2]

(b) The input p.d. V_{IN} is a sinusoidal alternating voltage of peak value 12 kV and period 40 ms.

(i) Calculate the maximum value of V_{OUT}.

maximum V_{OUT} = ... V [1]

(ii) Calculate the root-mean-square (r.m.s.) current in the load resistor.

r.m.s. current = ... A [1]

(iii) On Fig. 10.2, sketch the variation with time t of the power P dissipated in the load resistor for time t = 0 to t = 40 ms. Assume that P = 0 when t = 0.

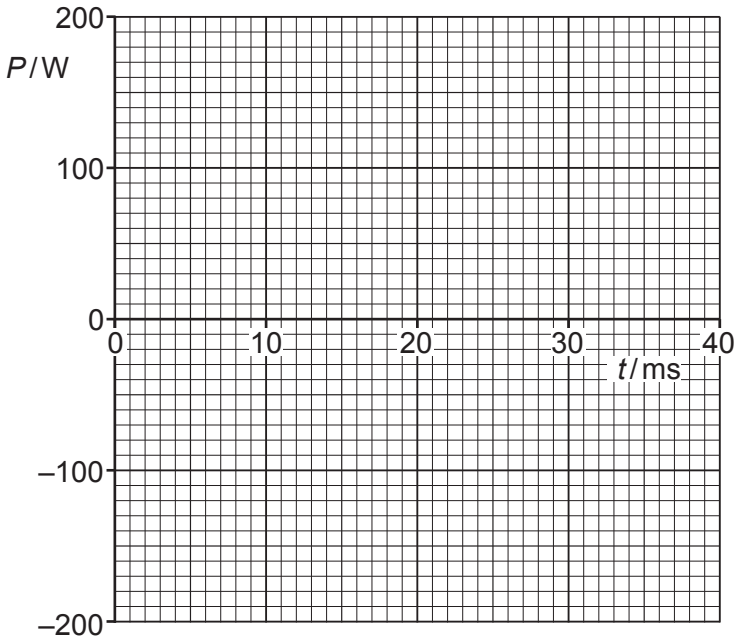

Fig. 10.2

[3]

(c) Explain, with reference to Fig.10.2, why the mean power in the load resistor is 70 W.

.....

.....

.....

..... [2]

[Total: 10]

BLANK PAGE

11 **(a)** A piezoelectric transducer containing a quartz crystal is used to obtain diagnostic information about internal structures.

Describe the function of the quartz crystal.

.....

.....

.....

..... [3]

(b) **(i)** Define *specific acoustic impedance*.

.....

.....

..... [2]

(ii) Describe, qualitatively, how the specific acoustic impedances of two materials affect the intensity reflection coefficient at a boundary between the materials.

.....

.....

.....

..... [2]

[Total: 7]

12 **(a)** Radioactive decay is both random and spontaneous.

State what is meant by:

(i) *random*

.....

..... [1]

(ii) *spontaneous*.

.....

..... [1]

(b) A sample of radioactive material contains atoms of an unstable nuclide X. The activity of the sample due to the atoms of X is *A*. The variation with time *t* of ln *A* is shown in Fig. 12.1.

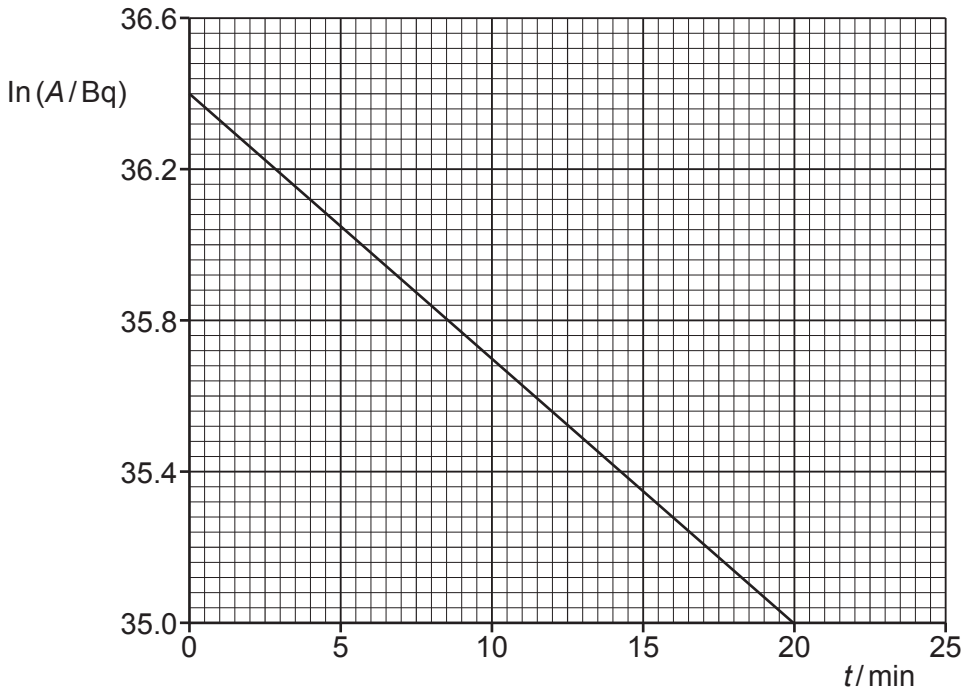

Fig. 12.1

(i) Use Fig. 12.1 to determine the half-life, in minutes, of nuclide X.

half-life = ... min [3]

(ii) At time $t = 0$, the mass of the atoms of X in the sample is 5.66×10^{-7} kg.

Determine the nucleon number of X.

nucleon number = ... [3]

[Total: 8]

BLANK PAGE

Permission to reproduce items where third-party owned material protected by copyright is included has been sought and cleared where possible. Every reasonable effort has been made by the publisher (UCLES) to trace copyright holders, but if any items requiring clearance have unwittingly been included, the publisher will be pleased to make amends at the earliest possible opportunity.

To avoid the issue of disclosure of answer-related information to candidates, all copyright acknowledgements are reproduced online in the Cambridge Assessment International Education Copyright Acknowledgements Booklet. This is produced for each series of examinations and is freely available to download at www.cambridgeinternational.org after the live examination series.

Cambridge Assessment International Education is part of the Cambridge Assessment Group. Cambridge Assessment is the brand name of the University of Cambridge Local Examinations Syndicate (UCLES), which itself is a department of the University of Cambridge.

© UCLES 2021